jaquar.com

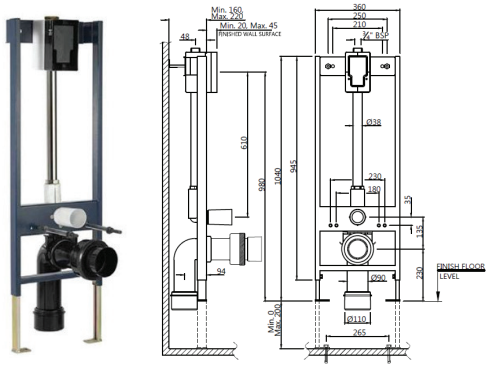

Product Code	FLV-CHR-1075FS
Description	i-Flush 20mm In-wall Body with Floor Mounting Frame, Installation Kit and “S-Type” Drain Pipe Connection Set for Wall Hung WC (without Exposed Actuation Plate Kit)
Flow Rate	1.2 LPS @ 3 bar
Recommended Water Pressure	1.5 Bar - 4.0 Bar (Dynamics)
Brass Specification in Percentage	**Brass Ingots as per IS:1264-1997** Cu (58.0-63.0), Sn (0.0-1.0), Pb (0.5-2.5), Ni (0.0-1.0), Al (0.2-0.8), Mn (0.0-0.5), Total Impurity (0.0-2.0), Zn (Remainder) **Brass Rod as per IS:319-1989** Cu (56.0-59.0), Pb (2.0-3.5), Fe (0.0-0.35), Total Impurity (0.0-0.7), Zn (Remainder) **Brass Pipe as per IS:407-1996** Cu (62.0-65.0), Pb (0.0-0.3), Fe (0.0-0.01), Total Impurity (0.0-0.6), Zn (Remainder)
Frame	MS Frame (Power Coated)
Drainage Pipe	HDPE (High Density Poly Etylene)
Finish	Salt Spray(350 hrs + Validated) Adhesion(Pass)
Available Colour Finishing	CHROME (CHR)
DISCLAIMER: Our every effort has been made to ensure factual accuracy, the information presented subject to changes due to requirements in different sites, markets and/ or countries. 10% variation in flow rate may be possible. Jaquar reserves the right to make the necessary amendments at any time without prior notice.	